SILICON TRANSISTORS

SEMICONDUCTORS

TYPE NPN / PNP	P_D T_a=25°C W	P_D T_c=25°C W	V_{CBO} V	V_{CEO} V	V_{EBO} V	I_C mA	h_{FE} @ V_{CE}/I_C min/max	V/mA	$V_{CE(sat)}$ @ I_C/I_B max V	mA/mA	f_T (typ) MHz	I_{CBO} (typ) nA	C_{ob} (typ) pF	Case
	Maximum Ratings						Electrical Characteristics At T_J=25°C							
2N3701	0.5	1.8	140	80	7	1000	40/120	10/150	0.2	150/15	80	10	12	TO-18
2N4030	0.8	4	60	60	5	1000	40/120	5/100	0.5	500/50	100	50	20	TO-39
2N4031	0.8	4	80	80	5	1000	40/120	5/100	0.5	500/50	100	50	20	TO-39
2N4032	0.8	4	60	60	5	1000	100/300	5/100	0.5	500/50	150	50	20	TO-39
2N4033	0.8	4	80	80	5	1000	100/300	5/100	0.5	500/50	150	50	20	TO-39
BCY11S	0.6	3	60	60	9	250	12/-	2/30	-	-	100	100	-	TO-39
SK100	0.8	4	60	50	6	500	40/300	5/150	-	-	100	1000	20	TO-39
SK100A	0.8	4	60	50	6	500	40/120	5/150	-	-	100	1000	20	TO-39
SK100B	0.8	4	60	50	6	500	100/300	5/150	-	-	100	1000	20	TO-39
SK100H	0.8	4	80	60	6	1000	100/300	5/150	0.3	150/15	150	1000	20	TO-39
SK101	0.8	4	40	30	5	500	40/300	5/150	-	-	100	1000	20	TO-39
SK102	0.8	4	30	30	3.5	1000	40/300	5/500	-	-	100	1000	20	TO-39
SL100	0.8	4	60	50	6	500	40/300	5/150	-	-	100	1000	20	TO-39
SL100A	0.8	4	60	50	6	500	40/120	5/150	-	-	100	1000	20	TO-39
SL100B	0.8	4	60	50	6	500	100/300	5/150	-	-	100	1000	20	TO-39
SL100H	0.8	5	80	60	7	1000	100/300	5/150	0.3	150/15	100	1000	15	TO-39
SL101	0.8	4	40	30	5	500	40/300	5/150	-	-	100	1000	20	TO-39
SL102	0.8	4	30	30	3.5	1000	40/300	5/500	-	-	100	1000	20	TO-39
SF103	0.4	1.8	30	24	5	250	40/300	5/150	-	-	250	1000	8	TO-18
SG103	0.4	1.8	30	24	5	250	40/300	5/150	-	-	250	1000	8	TO-18
BFX 84	0.8	-	100	60	5	1000	30/-	10/150	0.35	150/15	50	500	-	TO-39
BFX 85	0.8	-	100	60	5	1000	70/-	10/150	0.35	150/15	50	500	-	TO-39
BFX 86	0.8	-	40	35	5	1000	70/-	10/150	0.35	150/15	50	500	-	TO-39

(c) Audio output matched pairs

TYPE NPN / PNP	PD mw	VCBO V	VCEO V	VEBO V	IC A	h_{FE} @ min-max	V_{CE}/I_C V/mA	VCE (sat) V	@ IC/IB A/mA	ICBO µA	f_T (typ) MHz	Case
BC 187B	800	25	20	5.0	1.5	* 30-375	IV/500	0.5	1/500	10	60	TO-92+
BC 188B	800	25	20	5.0	1.5	* 80-375	IV/500	0.5	1/500	10	60	TO-92+
BC 368	800	25	20	5.0	1.0	85-375	IV/500	0.5	1/500	10	65	TO-92+
BC 369	800	25	20	5.0	1.0	85-375	IV/500	0.5	1/500	10	65	TO-92+

$\frac{hFE_1/hFE_2 \text{ DC current gain}}{\text{ratio of matched pair 187/188}}$ = 1.4 @ Ic=500 mA/V_{CE}=1V

(d) Medium speed switches

TYPE NPN / PNP	PD T_a=25°C W	V_{CBO} V	V_{CEO} (sus) V	V_{EBO} V	Ic mA	h_{FE} @ min/max	V_{CE}/I_C V/mA	$V_{CE(sat)}$ @ V	I_C/I_B mA/mA	f_T min MHz	I_{CBO} max nA	C_{ob} max pF	t_{on} max nS	t_{off} max nS	Case
	Maximum Ratings						Electrical Characteristics At T_J=25°C								
2N995	0.36	20	15	4	200	35/140	1/20	0.2	20/2	100	5	10	65	125	TO-18
2N2218	0.8	60	30	5	800	40/120	10/150	0.4	150/15	250	10	8	-	-	TO-39
2N2218A	0.8	75	40	6	800	40/120	10/150	0.3	150/15	250	10	8	35	285	TO-39
2N2219	0.8	60	30	5	800	100/300	10/150	0.4	150/15	250	10	8	-	-	TO-39
2N2219A	0.8	75	40	6	800	100/300	10/150	0.3	150/15	300	10	8	35	285	TO-39
2N2221	0.5	60	30	5	800	40/120	10/150	0.4	150/15	250	10	8	-	-	TO-18
2N2221A	0.5	75	40	6	800	40/120	10/150	0.3	150/15	250	10	8	35	285	TO-18
2N2222	0.5	60	30	5	800	100/300	10/150	0.4	150/15	250	10	8	-	-	TO-18
2N2222A	0.5	75	40	6	800	100/300	10/150	0.3	150/15	300	10	8	35	285	TO-18
2N2696	0.36	25	25	4	500	30/130	1/50	0.25	50/2.5	100	25	20	75	170	TO-18
2N2904	0.6	60	40	5	600	40/120	10/150†	0.4	150/15	200	20	8	45	100	TO-39
2N2904A	0.6	60	60	5	600	40/120	10/150†	0.4	150/15	200	10	8	45	100	TO-39
2N2905	0.6	60	40	5	600	100/300	10/150†	0.4	150/15	200	20	8	45	100	TO-39
2N2905A	0.6	60	60	5	600	100/300	10/150†	0.4	150/15	200	10	8	45	100	TO-39
2N2906	0.4	60	40	5	600	40/120	10/150†	0.4	150/15	200	20	8	45	100	TO-18
2N2906A	0.4	60	60	5	600	40/120	10/150†	0.4	150/15	200	10	8	45	100	TO-18
2N2907	0.4	60	40	5	600	100/300	10/150†	0.4	150/15	200	20	8	45	100	TO-18
2N2907A	0.4	60	60	5	600	100/300	10/150†	0.4	150/15	200	10	8	45	100	TO-18
2N3250	0.36	50	40	5	200	50/150	1/10	0.5	50/5	250	20**	6	70	225	TO-18
2N3251	0.36	50	40	5	200	100/300	1/10	0.5	50/5	300	20**	6	70	250	TO-18
2N3251A	0.36	60	60	5	200	100/300	1/10	0.5	50/5	300	20**	6	70	250	TO-18
SF105	0.4	20	20	5	500	75*	10/10	0.4	150/15	200	20	8	50	200	TO-18
SF106	0.4	40	40	5	500	75*	10/10	0.4	150/15	200	20	8	50	200	TO-18
SF107	0.4	60	60	5	500	75*	10/10	0.4	150/15	200	20	8	50	200	TO-18
SG105	0.5	20	20	5	500	75*	10/10	0.4	150/15	200	20	8	50	200	TO-18
SG106	0.5	40	40	5	500	75*	10/10	0.4	150/15	200	20	8	50	200	TO-18
SG107	0.5	60	60	5	500	75*	10/10	0.4	150/15	200	20	8	50	200	TO-18

* Typical gain. ** I_{CEX} † Pulse duration ≤ 300 µs Duty cycle ≤ 2%

CASE OUTLINES

SEMICONDUCTORS

DO-7

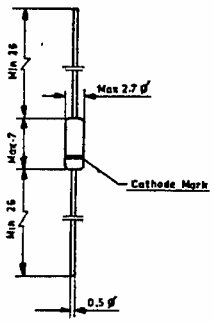

DO-35

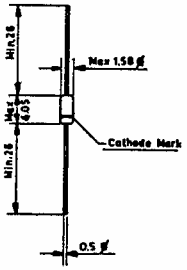

SOT-25

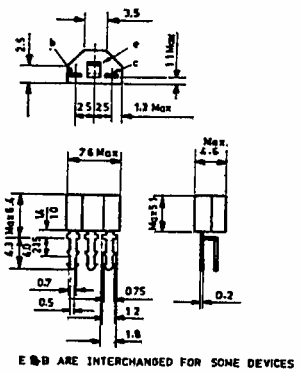

TO-3

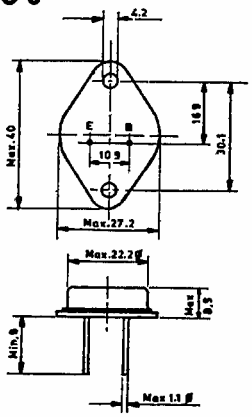

TO-5

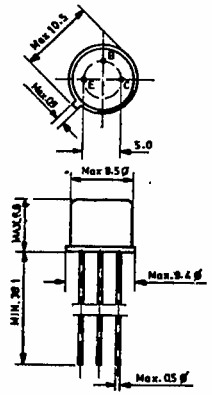

TO-18

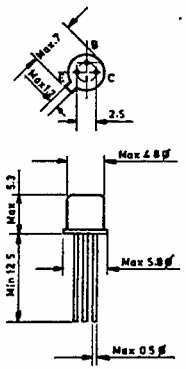

TO-39

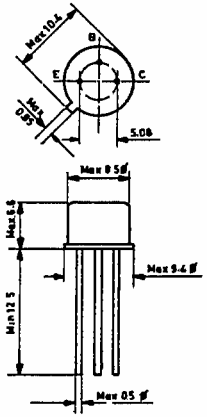

TO-66

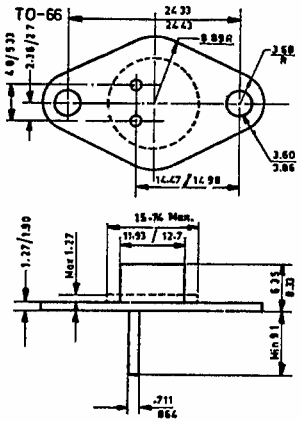

TO-72

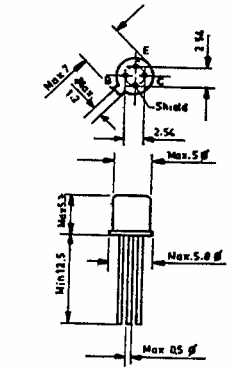

E & B ARE INTERCHANGED FOR SOME DEVICES

TO-92

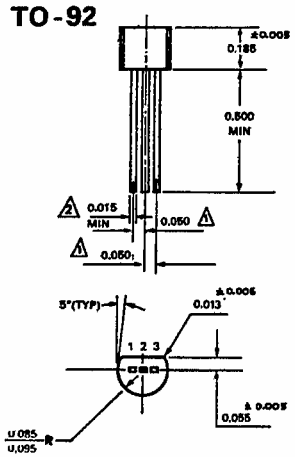

(Dimensions in inches)

Note : Dimensions in mm unless otherwise specified

TO-96

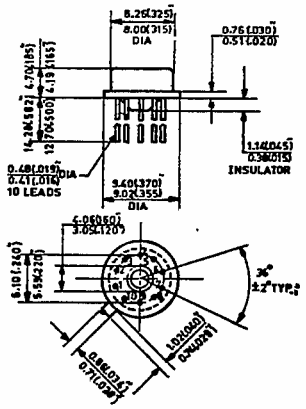

TO-99

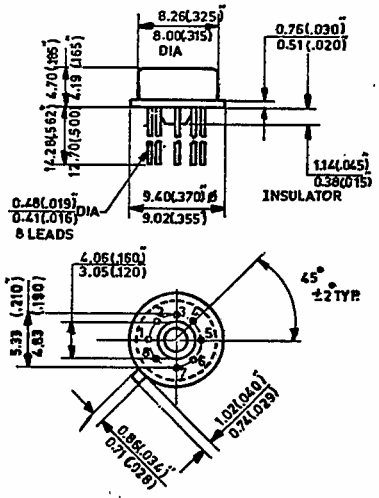

TO-105

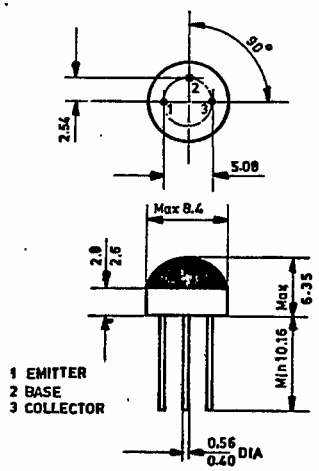

TO-106

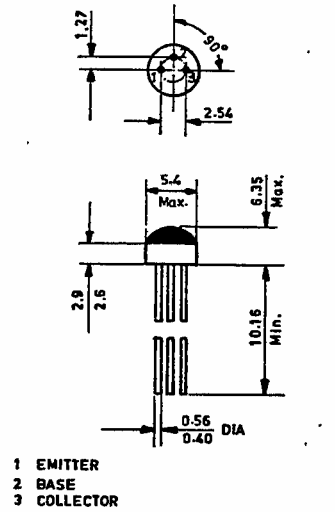

TO-220

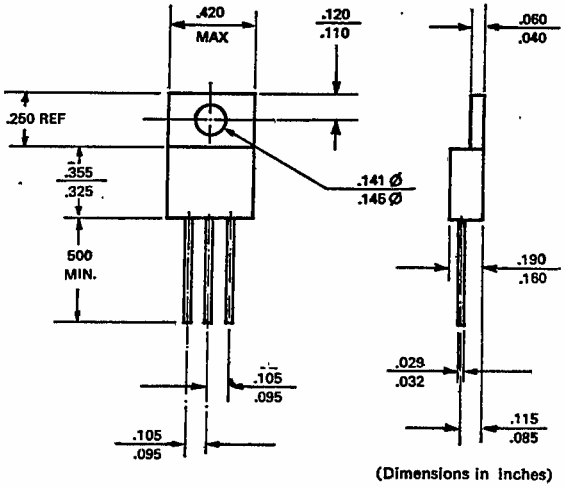

14 pin DIP

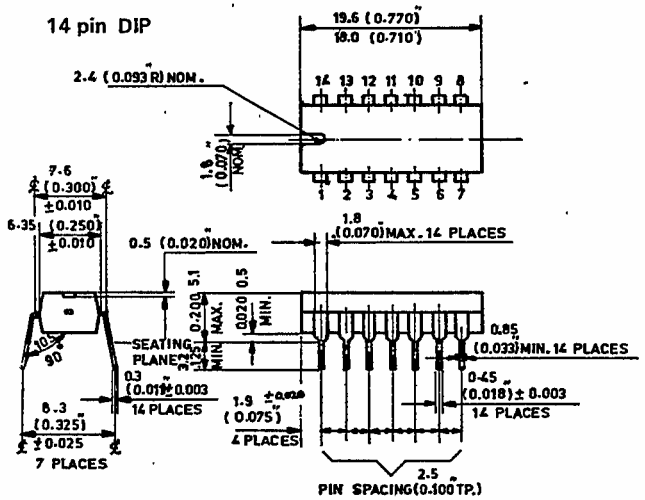

16 pin DIP

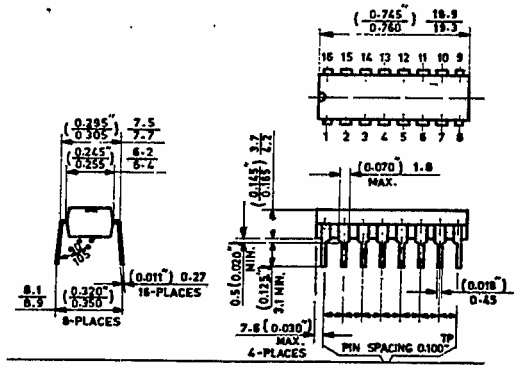

Note : Dimensions in mm unless otherwise specified